# Blaupunkt LW 4004

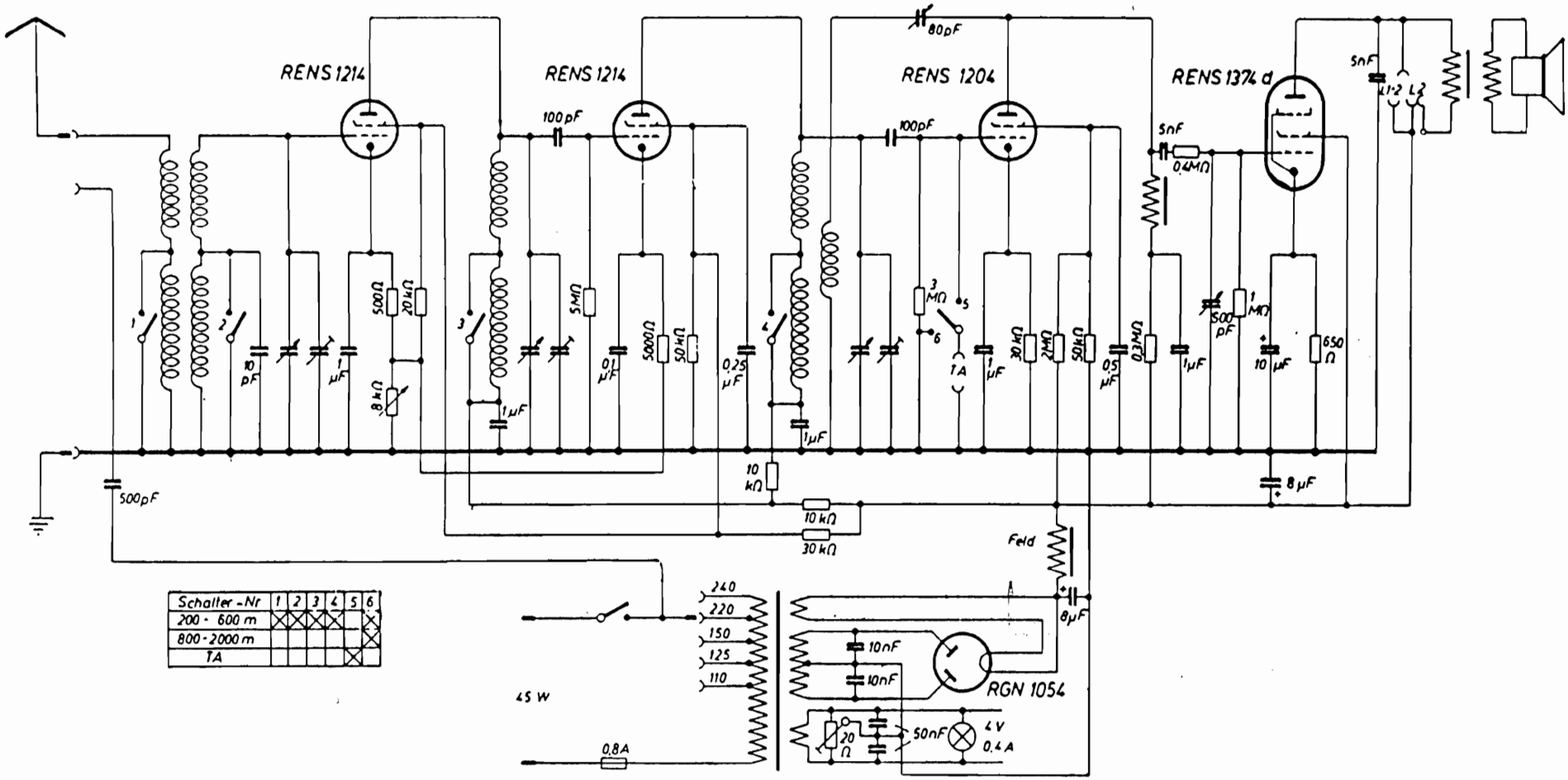


| Schalter-Nr | 1 | 2 | 3 | 4 | 5 | 6 |
|---|---|---|---|---|---|---|
| 200 - 600 m | X | X | X | X | | X |
| 800 - 2000 m | | | | | | X |
| TA | | | | | X | X |