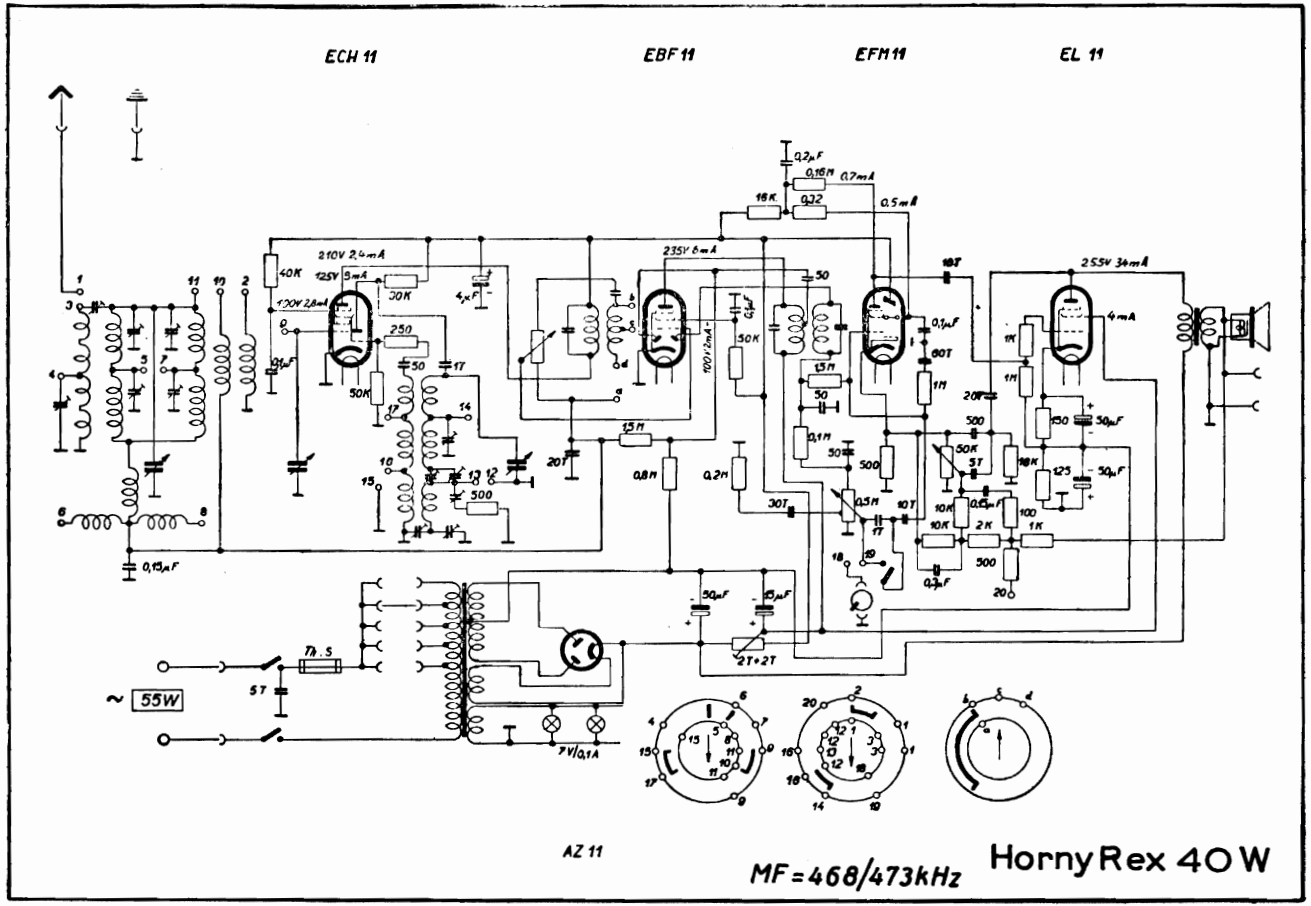
ECH 11
EBF 11
EFM 11
EL 11
AZ 11
MF = 468/473kHz
Horny Rex 40W
~ 55W
Th. S
7V/0,1A
210V 2,4mA
125V 5mA
100V 2,8mA
235V 6mA
255V 34mA
4mA
0,7mA
0,5mA
0,15μF