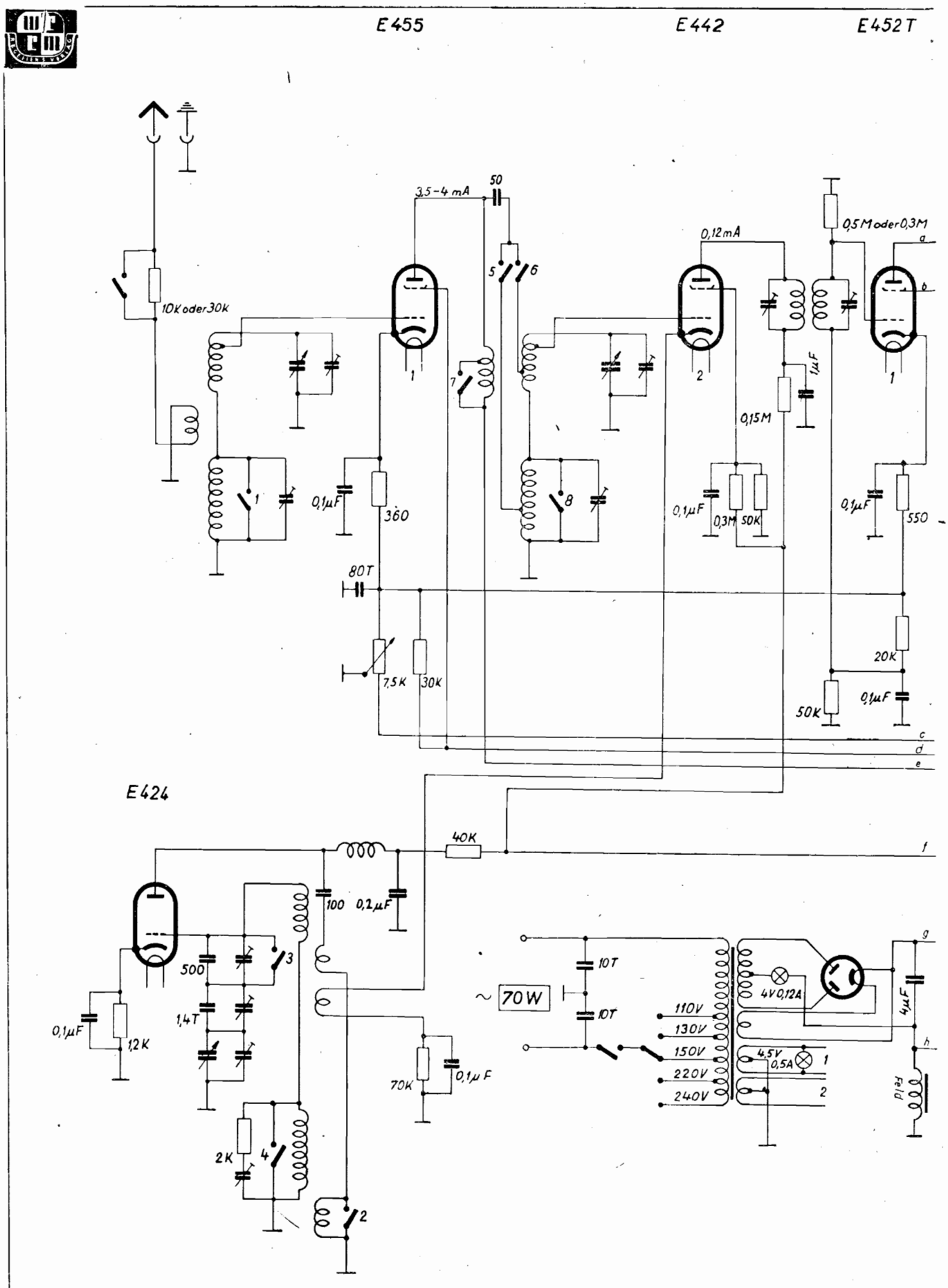

Minerva 66 W

1805

E452T C443

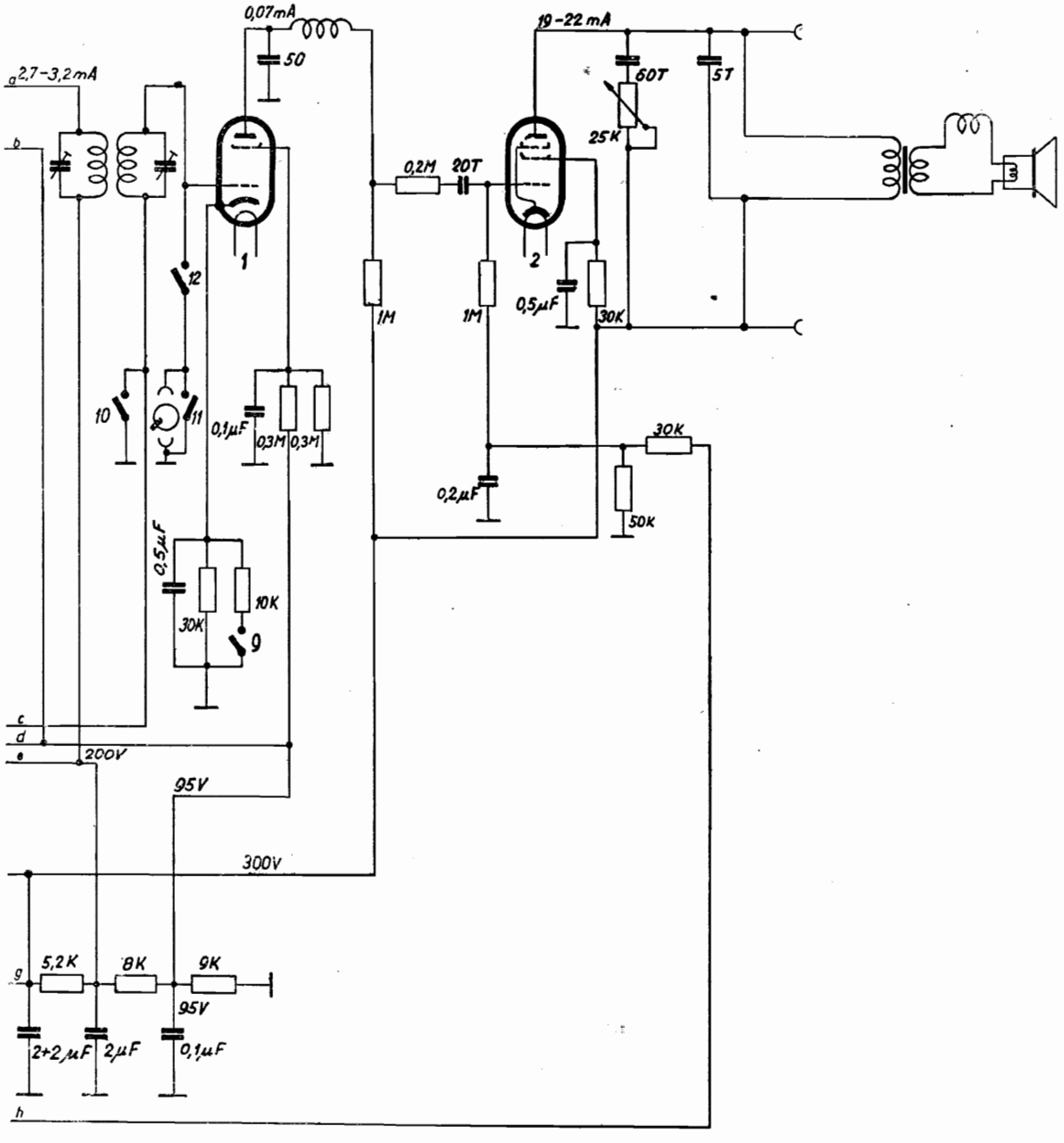

Schalter	1	2	3	4	5	6	7	8	9	10	11	12
Mittel	●	●	●	●		●	●	●			●	
Lang					●					●		
Ω	●	●	●				●		●			●

ZF = 128,5kHz

Minerva 66 W