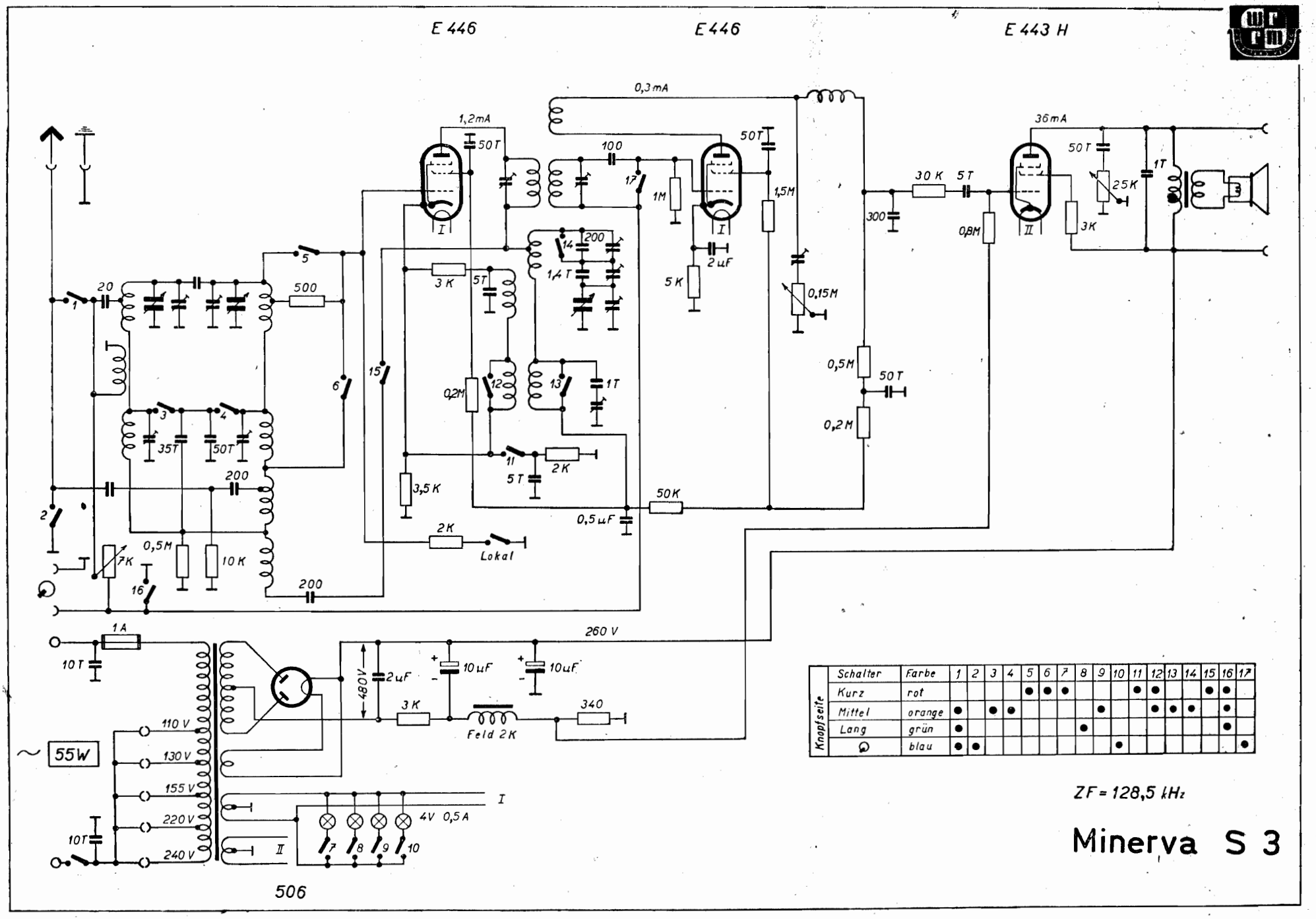

Knopfseite	Schalter	Farbe	1	2	3	4	5	6	7	8	9	10	11	12	13	14	15	16	17
	Kurz	rot					●	●	●				●	●			●	●	
	Mittel	orange	●		●	●					●			●	●	●		●	
	Lang	grün	●							●								●	
	⌕	blau	●	●								●							●

1065