Archief RadioDatabase.nl
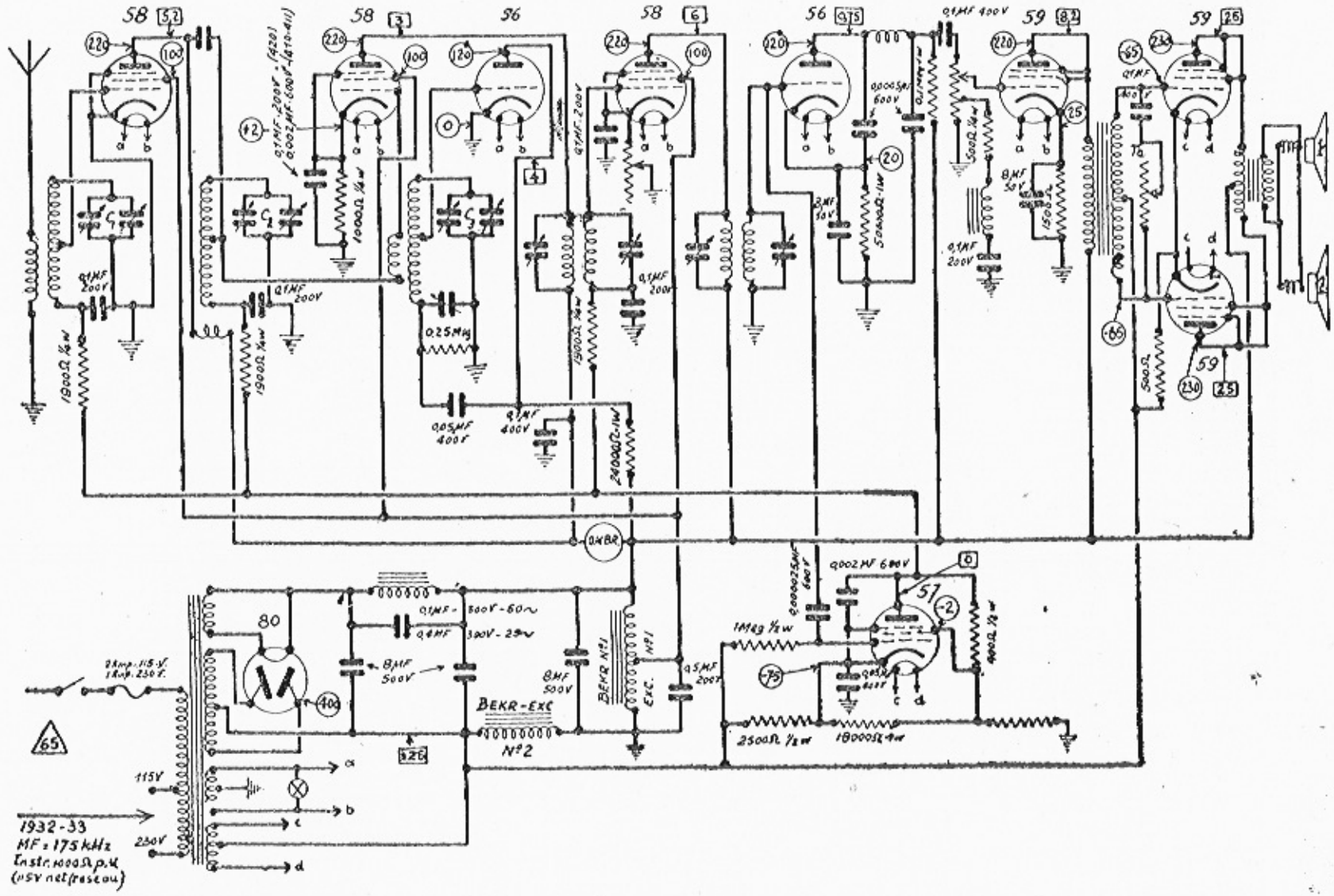
ZENITH 410 - 411 - 420